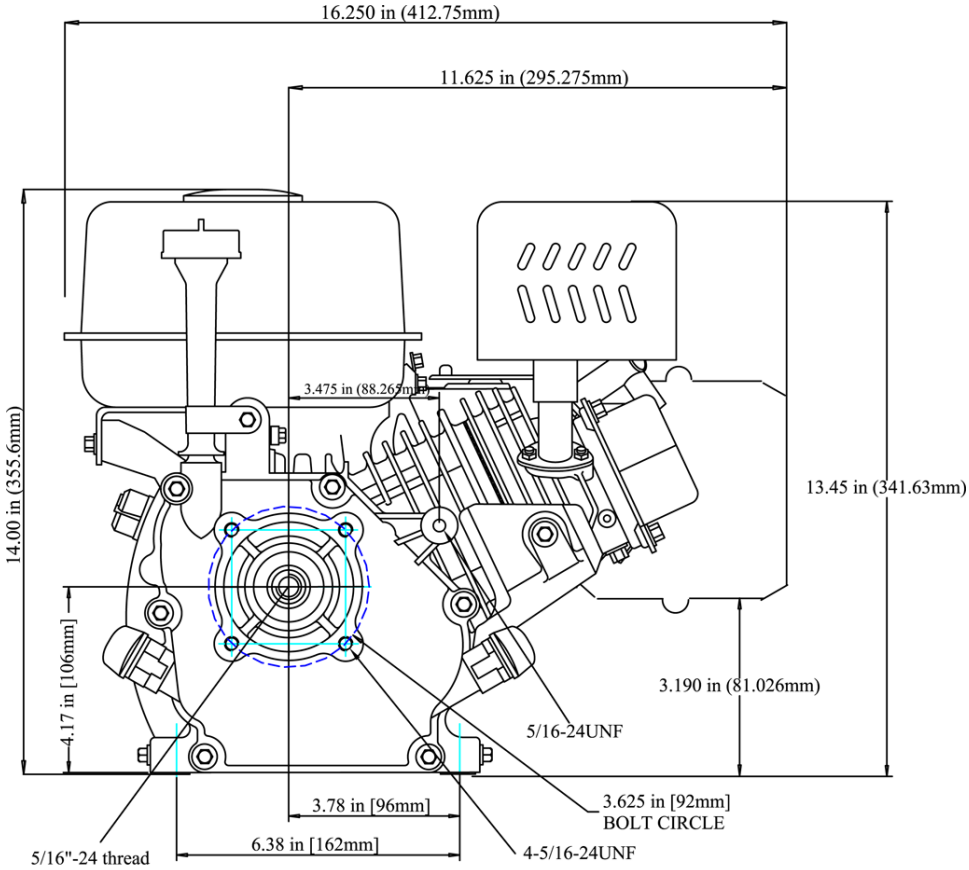
16.250 in (412.75mm)
11.625 in (295.275mm)
3.475 in (88.267mm)
14.00 in (355.6mm)
13.45 in (341.63mm)
4.17 in [106mm]
3.190 in (81.026mm)
5/16-24UNF
3.625 in [92mm]
BOLT CIRCLE
3.78 in [96mm]
6.38 in [162mm]
5/16"-24 thread
4-5/16-24UNF

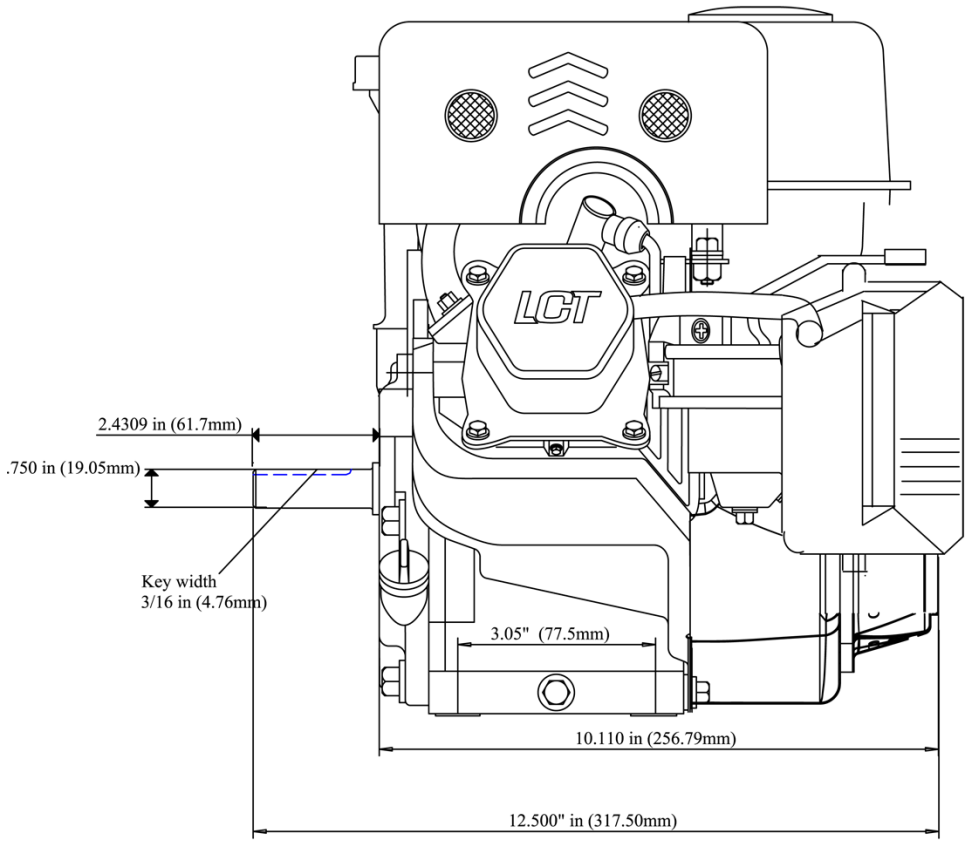
LCT
2.4309 in (61.7mm)
.750 in (19.05mm)
Key width
3/16 in (4.76mm)
3.05" (77.5mm)
10.110 in (256.79mm)
12.500" in (317.50mm)